Lloyd's Register Technology Days 2011

Safety, economy of operation and the environment

Sustainable Marine Power – The Methapu Project

Lloyd's Register

LIFE MATTERS

Marine Technical Library - http://vk.od.ua/marinelibrary
Manufacturer's instructions, Spare parts code books, Workshop manuals for your success marine business

Sustainable Marine Power – The Methapu Project

Ed Fort

Edward Fort, B.Sc., C.Eng., F.I.Mar.EST.
Edward Fort currently manages the Engineering Systems group within Lloyd's Register's Marine Product Development department.
He began his career as a marine engineering cadet with Mobil and thereafter served on board tankers and product carriers within the company fleet. In 1984 he moved to the European Space Agency's technology and research centre (ESTEC) in the Netherlands, eventually assuming responsibility for the testing of spacecraft power generation and energy storage systems.
In 2002, he joined Lloyd's Register's Research and Development (R&D) department following a brief period in industry with marine manufacturers and consulting engineers. Since then he has represented Lloyd's Register on several IACS working groups and, with over 20 years experience in fuel cell technology, on several EU-sponsored fuel cell technology development projects.

SUSTAINABLE MARINE POWER – THE METHAPU PROJECT

Edward P Fort

SUMMARY

Although the least mature of the established fuel cell technologies, Solid Oxide Fuel Cell (SOFC) technology is considered by a number of prominent power generation manufacturers to offer the greatest benefits long term. The prospect of highly efficient, relatively silent, virtually solid state, vibration-free electrical generators manufactured from low-cost materials using low-cost manufacturing techniques would appear feasible.

The extent to which methanol will be used as a future marine fuel is clearly a matter for debate. However, in response to increasingly demanding environmental regulations, it looks likely that in addition to the residual and distillate fuel oils which currently predominate, emerging low-carbon and sustainable fuels such as natural gas, methanol, bio-fuels and hydrogen will all figure in the fuel mix of the future.

The EC METHAPU project set out to evaluate the use of both SOFC technology and methanol as a means for converting chemical energy into electrical power for essential services on board an internationally trading cargo vessel covered by the SOLAS convention and 'in class'. Lloyd's Register was responsible for co-ordinating the activities of the project partners in the development of the safety justification or safety case and for ensuring that all necessary safety approvals were realised.

NOMENCLATURE

PCTC	Pure Car and Truck Carrier
SOFC	Solid Oxide Fuel Cell
AFC	Alkaline Fuel Cell
PEMFC	Polymer Electrolyte Membrane Fuel Cell
MCFC	Molten Carbonate Fuel Cell
LHV	Lower Heating Value
FEED	Front End Engineering Design
PHA	Preliminary Hazard Assessment
PHL	Preliminary Hazard List
HAZID	Hazard Identification
HAZOP	Hazard and Operability Study
FMECA	Failure Mode Effects and Criticality Analysis

1. INTRODUCTION

Sustainable power generation is a challenge for all sectors of industry, indeed for society as a whole, and it is unlikely that any particular technology will provide a solution in isolation, at least not for the foreseeable future. What is likely, however, is that a number of power generation technologies will play a part in moving towards a sustainable future, not least fuel cell technology, which is currently a focus of attention for many, if not all, sectors of industry.

The ability of fuel cell generators to provide power in the most extreme and arguably the most demanding of environments is well proven. The Gemini, Apollo and, most recently, space shuttle missions of the US manned space programmes have all relied on either Polymer Electrolyte Membrane Fuel Cell (PEMFC) or Alkaline Fuel Cell (AFC) technology for the main source of electrical power on board. Similarly, both PEMFC and AFC generators have supplied, and to this day continue to supply, electrical power essential to the operation of both civilian and naval submarines, not least some of the world's most advanced non-nuclear naval submarines, the U212 and U214 class boats, developed in Germany by Howaldtswerke Deutsche Werft (HDW) in co-operation with Siemens.

Almost all major vehicle manufacturers are engaged in the development of PEMFC power generators as a replacement for conventional combustion engines. The relatively poor performance of combustion engines under the part-load conditions characteristic of typical automotive driving cycle[1] results in overall efficiencies less than 25%. The improved part-load performance of the fuel cell promises significant savings under such conditions (between 5-10%), resulting in dramatic improvements in fuel economy.

Fuel cell technology promises equally significant benefits for industrial, residential and portable power generation. Low-noise, low-maintenance, high-efficiency industrial and residential cogeneration units, capable of operation with low-carbon fuels such as natural gas, have generated several thousands of megawatts of electrical power worldwide, while methanol-fuelled portable power

packs promise a massive four to five-fold increase in the 'battery' life of portable electronic equipment.

2. METHAPU PROJECT

2.1 AIMS

The METHAPU project[2] – full title Validation of Renewable Methanol Based Auxiliary Power System for Commercial Vessels – is co-funded by the European Commission (EC) under the Specific Targeted Research Project Instrument, Thematic Priority 1.6.2 Sustainable Surface Transport of the 6th Framework Research Programme (FP6). It has the following aims:

- Evaluation of SOFC technology on board a cargo vessel engaged in international trade to inform the development of larger SOFC generators.
- Evaluation of methanol as a marine fuel on board a cargo vessel engaged in international trade to facilitate the wider use of methanol as a marine fuel.
- Development of a technical justification for the use of methanol as a fuel on board a cargo vessel engaged in international trade to facilitate the introduction of regulations allowing the use of emerging marine fuels.
- Assessment of the short and long term environmental impacts of the application.

2.2 SOLID OXIDE FUEL CELL TECHNOLOGY

The use of fuel cell technology as an alternative to conventional power generation technologies is exhaustively documented. In the longer term, it is conceivable that fuel cell generators could satisfy all power demands on board a wide range of energy efficient ships. In the nearer term, however, fuel cell generators are more likely to operate alongside conventional generators on board large merchant ships to provide a limited near-zero emission capability (NO_x, SO_x and PM) when operating on low carbon fuels. Alternatively, as the sole means of power on board smaller restricted service vessels, fuel cell generators could provide true zero emission (CO_2, NO_X, SO_x, PM) power when operating on hydrogen.

Although the least mature of the established fuel cell technologies, SOFC technology is considered by several prominent power generation manufacturers to offer the greatest promise in the longer term. Highly efficient, relatively silent, virtually solid state, vibration-free electrical generators, manufactured from low-cost materials using low-cost manufacturing techniques, would appear feasible using SOFC technology.

Individual fuel cells, much like the cells within a battery, comprise a layer of electrolyte sandwiched between an anode and cathode.

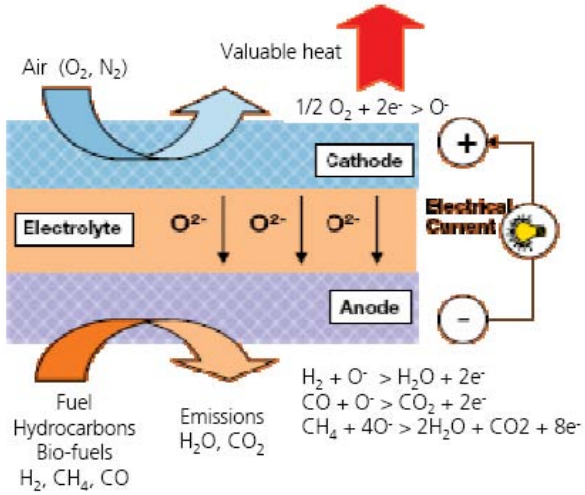

Figure 1: SOFC chemical reactions. Image courtesy of Wartsila.

Within the SOFC, the electrolyte is a solid layer of yttria-stabilised zirconium oxide, from which the SOFC takes its name and its unique characteristics. In operation, air fed to the cathode is reduced into oxygen ions and electrons. The oxygen ions travel through the electrolyte while the electrons, unable to follow, travel around an external electrical circuit creating an electric current. On reaching the anode, both oxygen ions and electrons combine with hydrogen and carbon monoxide within the incoming fuel supply to the anode to form water and carbon dioxide. Each individual fuel cell generates a potential difference of approximately 0.7-0.9 VDC between anode and cathode.

Electrical efficiency expectations for first generation SOFC generators are expected to be between 40 – 45% (LHV) [3]. While such performance is not dramatically better than that of conventional electrical generators, SOFC technology has the potential for high system efficiencies, particularly pressurised units and units integrated with gas turbines which together are expected to deliver electrical efficiencies of beyond 70% (LHV), representing a significant leap over all other electrical generation systems[4].

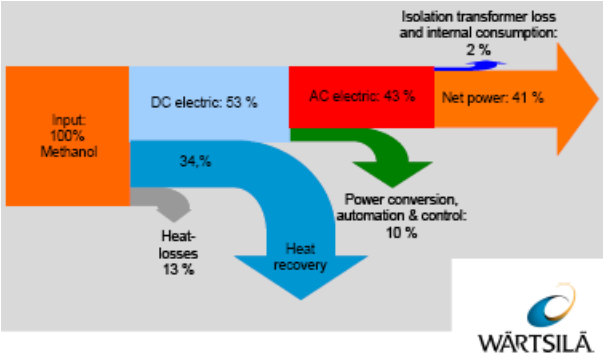

Figure 2: Sankey diagram for Wartsila WFC20 unit. Image courtesy of Wartsila.

2.3 METHANOL

The extent to which methanol, a highly flammable and toxic fuel, will be used as a future marine fuel is clearly a matter for debate. However, in response to increasingly stringent environmental emissions regulations, it is looking increasingly likely that in addition to the residual and distillate fuel oils which currently predominate, emerging low-carbon and sustainable fuels such as natural gas, methanol, bio-fuels and hydrogen will all figure in the fuel mix of the future.

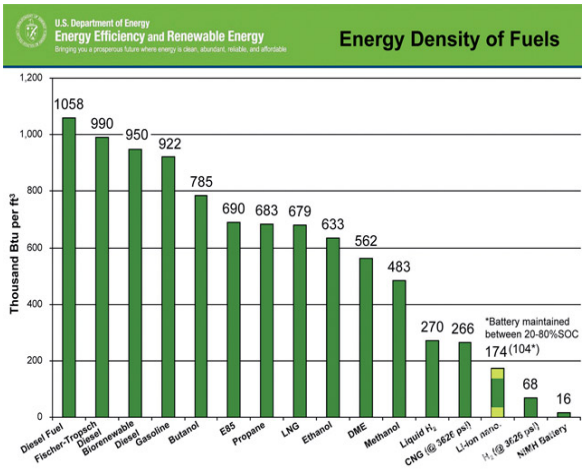

Figure 3. Volumetric and Gravimetric Energy density of fuels. Image courtesy of the US Department of Energy.

Among these emerging fuels, methanol, when handled correctly, is well placed to play a major part since it is a potentially sustainable liquid fuel with relatively good volumetric energy density ((4.42 kWh/l). While this is significantly less than diesel oil, it is comparable to liquefied natural gas (5.8 kWh/l) and significantly greater than renewable fuels such as hydrogen, whether compressed (0.75 kWh/l at 30 MPa) or liquefied (2.36 kWh/l)[5].

2.4 RELATED PROJECTS

The use of both SOFC technology and methanol as a fuel is unprecedented on board a merchant ship covered by the SOLAS Convention and in class. The METHAPU project has similarities and close links to other European research activities investigating the use of fuel cell technology and the use of alternative fuels on board ships. Most notable among these activities is the Joint Industry Project, FellowSHIP[6] led by Det Norske Veritas and funded by the Norwegian Research Council, Innovation Norway and the German Federal Ministry of Economics and Technology. This project recently completed the installation of a 320 kW liquefied natural gas (LNG)-fuelled Molten Carbonate Fuel Cell (MCFC) on board a purpose built offshore support vessel, *Viking Lady*.

The project selected the more mature MCFC technology and the more widely available, though non-sustainable, natural gas to evaluate fuel cell technology in harsh North Sea conditions. Both projects have taken advantage of the work done in previous EC-sponsored fuel cell technology projects, in particular the test conditions identified in the FCTESTNET project [7] and the safety recommendations identified in the FCSHIP project [8], in which several of the METHAPU project partners participated.

2.5 PARTNERS

Wallenius Marine (Wallenius) is a shipping company widely recognised as being at the forefront of the drive towards sustainable shipping. With its revolutionary conceptual ship design, *Orcelle*, Wallenius has a vision in which fuel cell technology and sustainable fuels such as methanol will power its future fleet. In accordance with its 'roadmap' for realising that vision, Wallenius has demonstrated its commitment to the development of both fuel cell technology and the use of alternative fuels by making a fully operational Pure Car and Truck Carrier (PCTC) available to the METHAPU project, together with substantial capital investment.

Wartsila is a world leader in power generation and at the forefront of the development of fuel cell technology for both stationary power and marine applications. In recognition of its key role in moving towards a sustainable future, Wartsila is developing a range of fuel cell generators, initially 50 to 250 kW, capable of operation on a variety of low-carbon and sustainable fuels including

natural gas, biogases and landfill gases. Within the METHAPU project, Wartsila will supply a 20 kW SOFC electrical generator suitable for installation on board the Wallenius PCTC and capable of operation on methanol.

Figure 4: The Wallenius concept ship, Orcelle. *Image courtesy of Wallenius.*

Lloyd's Register has significant experience with fuel cell technology and recognises its potential in providing sustainable shipboard power. Within the METHAPU project, we will apply our knowledge of ship construction and work with the Swedish Transport Agency (STA) to ensure that the design and construction of the METHAPU fuel cell system are suitable for installation on board the PCTC. In doing so, we will acquire the necessary understanding to develop the required Rules and Regulations. Lloyd's Register recognises that appropriate Rules and Regulations are a key enabler for such technologies.

Det Norske Veritas (DNV) also has significant experience with fuel cell technology through its involvement in the FellowSHIP project. Within the METHAPU project, DNV will apply its knowledge of fuel cell power generation and ship operations to identify the procedures and training necessary for the safe operation of the fuel cell system while in operation on board the PCTC.

The University of Genoa (UNIGE), particularly through its Rolls-Royce University Technology Centre, has sound knowledge of fuel cell systems and their environmental impact. UNIGE will apply its knowledge of Life Cycle Assessment (LCA) studies. Unlike the generic LCA studies carried out in the FCSHIP and FellowSHIP projects, within the METHAPU project UNIGE will evaluate the potential environmental impact of both the Wartsila 20 kW SOFC unit and a larger 500 kW unit (2 x 250 kW) when operating on methanol on board the Wallenius PCTC and when operating with traditional fuels.

3. CONCEPTUAL DESIGN

3.1 CONTEXT OF USE

The fuel cell system would be installed on board an existing and fully operational ship, MV *Undine* (IMO Number 9240160), a car carrier or, more precisely, a PCTC owned by Wallenius Lines and operated by Wallenius Marine. *Undine* operates on a worldwide trading pattern primarily transporting vehicles between exporting and importing regions of the world. Its main trading route is between Asia and North America via Europe, with a typical round trip taking about 90 days. Sufficient bunkers are taken on board to complete the passage between loading and unloading ports. During navigation, *Undine's* bridge is continuously attended while the machinery space is attended only during coastal navigation and manoeuvring; at all other times the ship operates with unattended machinery spaces. Although *Undine's* crew would have little or no experience of fuel cell technology, in the past *Undine* has served as a platform for several research and development projects with which the crew have fully engaged, and the same positive attitude was anticipated for the fuel cell system.

Figure 5: Wallenius PCTC, Undine. *Image courtesy of Wallenius.*

In order to minimise disruption to *Undine's* trading pattern, the primary components of the fuel cell system would be constructed and, as far as possible, tested ashore and then installed on board *Undine* during a scheduled, if slightly extended, port visit. It was intended that the primary components would be lifted on board while alongside in Bremerhaven, Germany. Then, following successful Harbour Acceptance Testing (HAT) and approval from both Lloyd's Register and the STA, the system would run-up while underway on passage.

3.2 FUEL CELL SYSTEM

The fuel cell system to be installed on board *Undine* would comprise five primary components or sub-systems:

- Fuel cell unit.
- Fuel cell room.
- Methanol tank.
- Bunkering system.
- Supply and return lines.

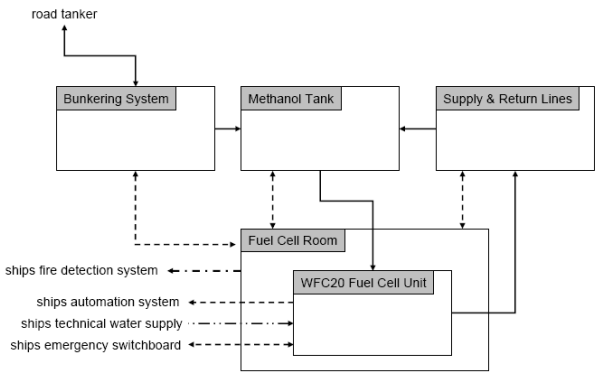

Figure 6: METHAPU fuel cell system block diagram.

3.2.1 Fuel cell unit

The fuel cell unit would be supplied by Wartsila and was based on their first generation WFC20 20 kW stationary power design, which was itself undergoing field trials in Vaasa, Finland in the first phase of Wartsila's 250 kW SOFC development programme.[9] At the heart of the WFC20 unit are 24 SOFC stacks of the planar type supplied by Danish company Topsoe Fuel Cell, a leader in SOFC technology. The SOFC stacks operate slightly above atmospheric pressure and at high temperature, typically between 750 – 850 °C. The high operating temperature allows the fuel cell to operate with a variety of hydrogen rich gases such as methane, biogases and landfill gases. It also allows the fuel cell to operate without the need for extensive additional fuel processing equipment, as would be required for lower operating temperature fuel cell technologies, such as those in development for automotive applications.

Recognising that fuel cell technology would be completely unfamiliar to *Undine's* engineers, the fuel cell unit would need to be fully automatic in operation, with automatic shutdown in the event of abnormal operation. Only in the event of an emergency such as fire or a major methanol leakage, would the intervention of the crew be required in order to manually activate fire fighting systems, as is established practice for CO_2 flooding.

In addition to automatic operation, remote monitoring of the fuel cell unit would be provided both from *Undine's* engine control room and, using the ship's satellite communications system, Wartsila's premises ashore in Finland.

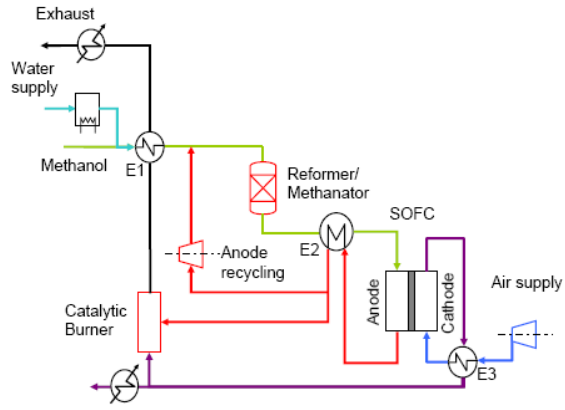

Figure 7: Simplified WFC20 Process Diagram. Image courtesy of Wartsila.

Operation of the WFC20 stationary power design on board *Undine* would however necessitate several modifications to the unit in order to take account of more stringent marine regulations, particularly those relating to fire prevention with their implications for the selection of materials, and the more demanding marine environment[10], particularly with respect to inclination, vibration and shock.

Vibration and shock considerations would require the use of resilient mountings and flexible couplings, both within the fuel cell unit and for the unit itself. The quality of the air supply to the fuel cell unit would be of particular concern. The potential for corrosion and insulation failure due to highly humid and highly saline air would necessitate dehumidification and filtering of the incoming air supply while taking account of the air temperature, flow rate and dew point requirements of the WFC20 unit.

Figure 8: Wartsila WFC20 SOFC unit. Image courtesy of Wartsila.

Modifications would be required to allow the WFC20 unit to operate on liquid fuel (methanol) rather than the hydrogen rich gases that the stationary power unit had been designed for. Within the scope of the METHAPU project, Wartsila would develop a methanol reformer capable of converting liquid methanol to a gaseous mixture of hydrogen and methane capable of supplying the fuel cell unit.

Modifications would also be required to match the electrical output from the WFC20 to that of the ship's electrical distribution network. In order to evaluate the SOFC technology under the most realistic marine conditions, the WFC20 unit would operate in parallel with *Undine's* existing 440 VAC 60 Hz generators in supplying the main switchboard. With an installed electrical generating capacity of approximately 3.8 MW, the additional 20 kW output from the WFC20 unit could be readily accommodated on *Undine's* electrical distribution network and would have little impact on the operation of the ship from an electrical point of view. Connection to the main switchboard, however, would mean several modifications to satisfy the classification requirements for electrical generators providing the main source of electrical power, i.e. those connected to the main switchboard.

Unlike the electrical output from the WFC20 unit, the thermal output from the unit would not be utilised on board *Undine*. Although one of the key attractions of SOFC technology is the generation of high grade thermal energy, resulting in cogeneration efficiencies over 80% (LHV), recovery of the energy was beyond the scope of the project.

3.3.8.1.1 Electrical equipment, vibration immunity
ART Ref. 1.4.2.8 (1)

Testing should demonstrate the ability of the equipment to tolerate the following conditions:

Frequency [Hz]	Displacement [mm]	Acceleration [g]
5 to 13.2	±1.0	
13.2 to 100		±0.7

IACS URE10 – *Test specification for type approval*
IEC60092-504 5 – *Environmental type testing parameters*
IEC60721-3-6 Table V - *Classification of mechanical conditions*

3.3.3.2.2 Machinery and equipment, Angle of operation
ART Ref. 1.4.2.3a (4)

Testing should demonstrate satisfactory operation of machinery and equipment under the following conditions:

Angle of inclination (athwartships)	±15° Static, ±22.5° dynamic
Angle of inclination (fore-and-aft)	±5° Static, ±7.5° dynamic

SOLAS Chapter II-1 Part C Reg.26.6 - *General*
IACS URM46.1 - *Ambient conditions – Inclinations*
Ship rules LR Pt 5 Ch 1 3.6.1 – *Inclination of ship*
IEC60092-101 2.6.2 – *Mandatory condition limits*
IEC60721-3-6 Table V- *Classification of mechanical conditions*

Figure 9: Testing requirements for marine fuel cell generators - vibration immunity & angle of inclination - FCTESTNET Final Report, WP1, June 2005.

3.2.2 Fuel cell room

According to both statutory and classification requirements any 'oil-fired boiler' or 'oil fuel unit' is required to be located in a machinery space of Category A[11]. Recognising the intent rather than the exact wording of the regulation, i.e. to minimise the risk of fire from high risk sources, it was considered appropriate for the WFC20 unit also to be located in a Category A machinery space. Lack of available space within *Undine's* engine-room and the need to avoid disruption to her operational schedule would necessitate the construction of a dedicated machinery space or fuel cell room.

The fuel cell room would be supplied by Wallenius and manufactured by a contractor fully familiar with the outfitting of ships. In addition to satisfying the Category A machinery space requirements for structural fire protection, fire detection and fire extinguishing, the room would need to provide all auxiliary services necessary for operation of the fuel cell unit on board *Undine*.

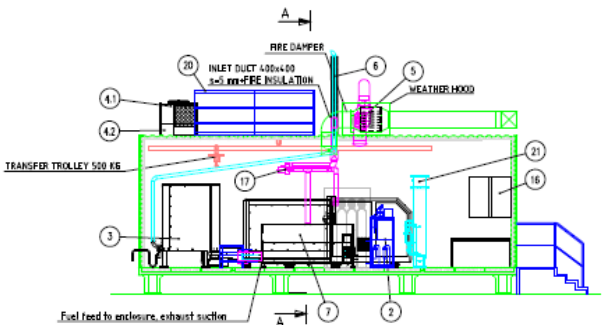

Figure 10: Fuel cell room showing WFC20 unit installed. Image courtesy of Wallenius.

The fuel cell room would be permanently fixed on *Undine's* weather deck aft of the funnel on the starboard side and in the vicinity of the emergency generator room, taking note of the emergency evacuation route between accommodation and lifeboat located on the stern. Such a location was convenient and would provide easy access to *Undine's* electrical system via the emergency generator room and switchboard. To support the load of the fuel cell room, it was anticipated that the deck would require strengthening.

Auxiliary equipment to support the operation of the fuel cell unit would include methanol feed pumps, a steam generator, air de-humidifier, electrical distribution board, isolating transformer, heat recovery unit, and a heating and ventilation system. In addition to auxiliary services, the fuel

cell room would also include a gas detection system capable of isolating the fuel cell unit both electrically and mechanically in the event of a methanol or gas leakage.

3.2.3 Methanol tank

The methanol fuel tank, was to be supplied by Wallenius and manufactured by a contractor familiar with the construction chemical storage tanks. The tank was to be based on a standard 20′ ISO tank container of the IMO-1 type frequently used for the transportation of hazardous cargoes such as methanol by both land and sea. The use of an independent tank, which could be fabricated and fitted out ashore, was considered most appropriate for installation on, and subsequent removal from, a ship in continuous operation. The tank was to be permanently fixed on the port side towards the aft end of *Undine's* weather deck. The area around the tank would need to be designated a hazardous area. It was anticipated that deck strengthening in the vicinity of the methanol tank would also be required.

While such tanks are commonly used as storage tanks for the transport of methanol cargoes by sea, their use as fuel tanks would require modifications to accommodate a falling liquid level within the tank. With the fuel cell unit in operation and consuming methanol, the falling liquid level within the tank would lead to both a change in internal pressure and free surface sloshing. As a result, as well as the regular fittings associated with a storage tank and additional fittings and instrumentation necessary commonly associated with fuel tanks, the installation of a pressure vacuum (PV) valve and internal baffles would also be required. An enclosure incorporating a save-all would be provided around the outlet valves to contain any light leakage.

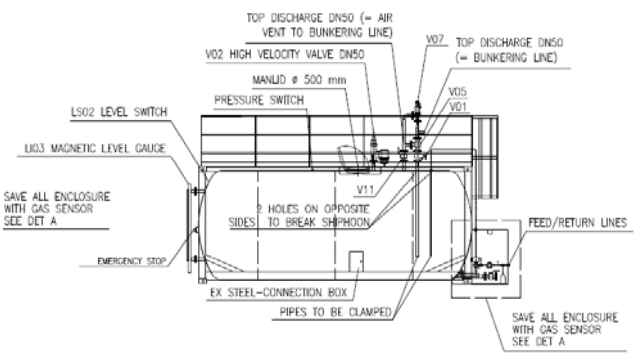

Figure 11: Methanol Tank and fittings. Image courtesy of Wallenius.

3.2.4 Bunkering system

The methanol bunkering station would be installed alongside *Undine's* existing bunkering station on the main deck (deck 6) allowing the existing starboard aft side shell hatch to be used for bringing the methanol bunkering hose aboard *Undine*. A fixed, all welded, pipeline from the bunkering station to the methanol tank on the weather deck would be run up through the funnel casing, then underneath the Weather Deck in the roof of the garage deck where it would finally emerge close to the methanol tank. Connection of the bunkering hose from the road tanker to the fixed pipeline would be made within a dedicated enclosure using a dry-break connection. The entire length of the bunkering pipeline – from the point at which the bunker hose enters the ship at the side shell hatch, up to the connector enclosure and from there to the point at which the fixed pipeline emerges above the weather deck – would be enclosed within ducting, flexible from the side shell hatch to the connector enclosure and fixed from the enclosure to the outlet at the methanol tank. The space between the inner pipe work and the outer ducting, and within the connector enclosure, would be separately ventilated and gas detection provided to monitor for possible methanol leakage.

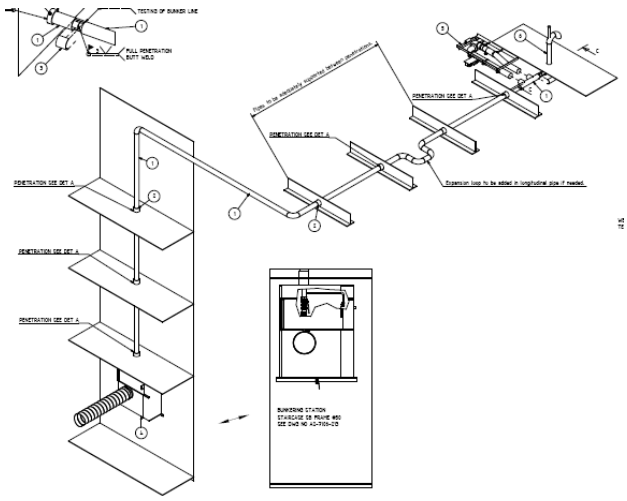

Figure 12: Bunkering enclosure and pipeline. Image courtesy of Wallenius.

3.2.5 Supply and return lines

A transfer pump located at the methanol tank would transfer the methanol the short distance between the tank and the high pressure feed pumps located within the fuel cell room. Excess

methanol would be returned to the tank via a separate fixed line running in parallel with the supply line. As with the bunker pipeline, the supply and return lines would be run underneath the weather deck in the roof of the garage deck. Also as with the bunkering line, the entire length of both supply and return lines would be enclosed within a common ventilated duct with gas detection monitoring the space between the duct and the pipeline.

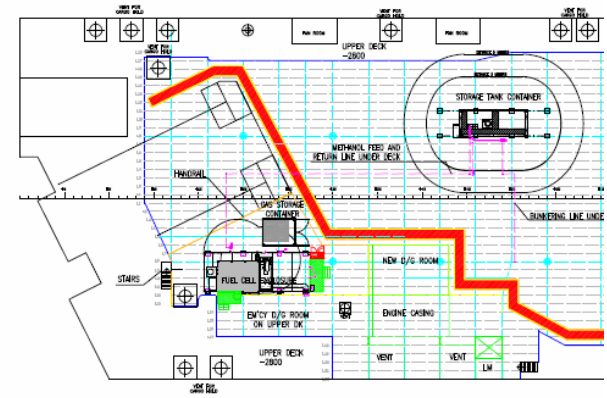

Figure 13: Undine's *weather deck showing locations of fuel cell room (bottom left), methanol tank (top right) and evacuation route. Image courtesy of Wallenius.*

4. RISK ASSESSMENT

4.1 REGULATIONS

Undine is classed by Lloyd's Register and registered or 'flagged' in Sweden, thus falling under the responsibility of the Swedish Administration, in particular the Swedish Transportation Agency (STA). In accordance with Lloyd's Register's Rules and Regulations, electrical generators supplying the ship's main switchboard are considered essential to the safe operation of the ship and, as a result, are required to be constructed under survey [12]. Although the electrical output of the fuel cell unit would be connected to the main switchboard, *Undine* would clearly not be dependent on the additional supply. As such, providing it could be established that safeguards were in place to protect the main switchboard from the effects of any failure of the fuel cell unit, the unit itself could be considered non-essential. As a result, although the fuel cell unit would still be required to be constructed under survey, only the safety of the unit, rather than the safety and reliability of the unit, would need to be demonstrated. Although a seemingly minor point, in the absence of any available reliability data for fuel cell systems operating in the marine environment (either quantitative or qualitative) a focus only on safety would make the necessary approval process significantly more straightforward, though by no means routine.

In general, Lloyd's Register's Rules and Regulations incorporate all statutory regulations associated with the safe design and construction of shipboard machinery and equipment as published in SOLAS. As a consequence, Lloyd's Register is allowed to issue Safety Construction (SAFCON) certificates when acting as a recognised organisation (RO) for machinery and equipment which satisfies Lloyd's Register's Rules and Regulations without further need to consult the national administration. However, SOLAS II-2, Part B, Regulation 4.2.1 states that the following limitations shall apply to the use of oil as fuel:

"4.2.1.1 except as otherwise permitted by this paragraph, no oil fuel with a flashpoint of less than 60°C shall be used;

4.2.1.2 in emergency generators oil fuel with a flashpoint of not less than 43°C may be used;

4.2.1.3 the use of oil fuel having a flashpoint of less than 60°C but not less than 43°C may be permitted (e.g., for feeding the emergency fire pump's engines and the auxiliary machines which are not located in the machinery spaces of category A) subject to the following...(*incomplete*)

4.2.1.4 in cargo ships the use of fuel having a lower flashpoint than otherwise specified in paragraph 2.1, for example crude oil, may be permitted provided that such fuel is not stored in any machinery space and subject to the approval by the Administration of the complete installation."

Thus, while the use of methanol with a flash point of 12.2 °C (TCC method) is not prohibited, as stated in 4.2.1.4 above, its use as a fuel on board the *Undine*, a cargo ship, requires the entire METHAPU fuel cell system to be separately approved by the STA, irrespective of whether Lloyd's Register is acting as an RO on their behalf. The project team engaged very early on with the STA to agree a common way forward in what was a unique endeavour.

The absence of technical standards relating to the use of methanol as a marine fuel clearly necessitated a risk-based approach to the safety assessment for the METHAPU system. This was recognised by all project partners and the STA[13]. It is, however, the opinion of Lloyd's Register that the management of risk is just one element, albeit

a major one, of providing assurance that a system will be fit for purpose, however defined. As a consequence, Lloyd's Register has developed a set of classification requirements based on systems engineering best practice[14].

Systems engineering practices ultimately aim to ensure that complex engineering systems, such as the METHAPU fuel cell system, satisfy their conceptual requirements, not least those requirements related to safety. It was agreed with the STA early in the project that Lloyd's Register's systems engineering requirements, specifically Lloyd's Register's Rules for Engineering Systems of Unconventional Design, would be used as the basis for the assessment of the METHAPU fuel cell system by both Lloyd's Register and the STA.

3.0 PROPERTIES OF METHANOL

3.1 Physical Properties of Pure Methanol

Molecular Weight	32.04 g mol^{-1} [5]	**Boiling Point** 760 mm Hg (101.3 kPa)	64.6°C [5] (148.3°F)
Critical Temperature	512.5K [1] (239°C; 463°F)	**Freezing Point**	-97.6°C [5] (-143.7°F)
Critical Pressure	8.084MPa [5] (78.5 atm)	**Reid Vapour Pressure**	32 kPa [1]
Critical Density	0.2715 g cm^{-3} [1]	**Flash Point**	
Critical Compressibility Factor	0.224 [1]	Open vessel (TCC method)	12.2°C (54.0°F) [10]
		Closed vessel (TOC method)	15.6°C (60.1°F) [1]
Specific Gravity		**Auto Ignition Temperature**	470°C (878°F) [10]
Liquid		**Viscosity**	
(15°/4°C)	0.7960 [3]	*Liquid*	
(20°/4°C)	0.7915 [3]	-25°C (-13°F)	1.258 mPa s [5]
(25°/4°C)	0.7866 [3]	0°C (32°F)	0.793 mPa s [5]
Vapour	1.11 [3]	25°C (77°F)	0.544 mPa s [5]
Vapour Pressure		*Vapour*	
20°C (68°F)	12.8 kPa [4] (1.856 psia) (96 mm Hg)	25°C (77°F)	9.68 µPa s [1]
		127°C (261°F)	13.2 µPa s [5]
25°C (77°F)	16.96 kPa [4] (2.459 psia) (127.2 mm Hg)	**Surface Tension**	
		20°C (68°F)	22.6 mN m^{-1} [2]
		25°C (77°F)	22.07 mN m^{-1} [5]
Latent Heat of Vapourization		**Refractive Index**	
25°C (77°F)	37.43 kJ mol^{-1} [5] (279.0 cal g^{-1})	15°C (59°F)	1.33066 [3]
		20°C (68°F)	1.32840 [10]
		25°C (77°F)	1.32652 [1]
64.6°C (148.3°F)	35.21 kJ mol^{-1} [5] (262.5 cal g^{-1})	**Thermal Conductivity**	
		Liquid	
		0°C (32°F)	207 mW m^{-1} K^{-1} [5]
		25°C (77°F)	200. mW m^{-1} K^{-1} [5]
Heat Capacity at Constant Pressure 25°C (77°F) (101.3kPa)		*Vapour*	
		100°C (212°F)	14.07 mW m^{-1} K^{-1} [5]
		127°C (261°F)	26.2 mW m^{-1} K^{-1} [5]
Liquid	81.08 J mol^{-1} K^{-1} [1] (0.604 cal g^{-1} K^{-1}) (0.604 Btu lb^{-1} °F^{-1})	**Heat of Combustion**	
		Higher heating value (HHV) (25°C, 101.325kPa)	726.1 kJ mol^{-1} [5] (22.7 kJ g^{-1})
Vapour	44.06 J mol^{-1} K^{-1} [1] (0.328 cal g^{-1} K^{-1}) (0.328 Btu lb^{-1} °F^{-1})	Lower heating value (LHV) (25°C, 101.325kPa)	638.1 kJ mol^{-1} [calc] (19.9 kJ g^{-1})
Coefficient of Cubic Thermal Expansion		**Explosive Limits (in air)**	Lower 6.0(v/v)% [3] Upper 36.5(v/v)% [3]
20°C	0.00149 per °C [5]		
40°C	0.00159 per °C [5]		

Figure 14: Methanol product data sheet. Image courtesy of Methanex Corporation.

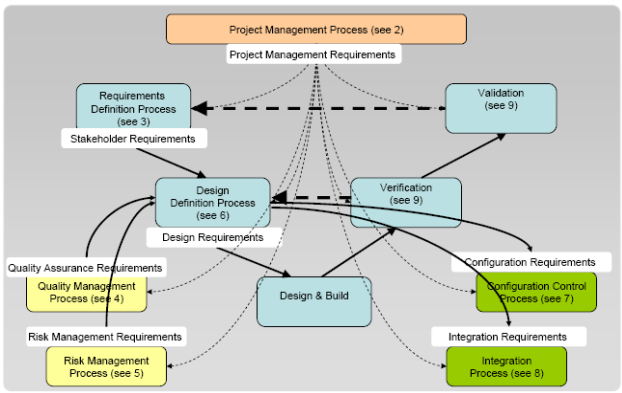

Figure 15: METHAPU assessment process.

With regard to the management of risk, the risk management process used during the development of the METHAPU fuel cell system would aim to ensure that any risks stemming from the installation of the system on board the vessel *Undine* were managed in a controlled and systematic manner so that any residual risks were, in the opinion of the project partners, no greater than those normally associated with the operation of marine machinery and equipment on board a cargo vessel covered by the SOLAS convention and 'in class'.

Due to the novelty of the METHAPU system and the absence of quantitative safety and reliability data for both fuel cell installations operating in the marine environment and the use of methanol as a marine fuel, the risk management methodology would rely heavily on the judgement of technical experts from within project partner organisations. Such a methodology was considered valid given the considerable expertise available within those organisations.

In addition to compliance with the applicable requirements of Lloyd's Register's Rules and Regulations, the METHAPU risk management process would employ several risk analysis techniques, focused on both the fuel cell unit in isolation and the fuel cell system as a whole, according to their perceived effectiveness in identifying hazards and determining the associated risk stemming from a variety of sources including inappropriate design, component failure and human error.

Recognising the scope of supply for the various key sub-systems, the following studies were carried out:

Sub-system level:

- Potential Problems Analysis (PPA) – fuel cell unit
- Preliminary Hazard List (PHL) – fuel cell unit
- Failure Mode Effect and Criticality Analysis (FMECA) – fuel cell unit
- Hazard and Operability Analysis (HAZOP) – fuel cell unit

System level:

- Hazard Identification (HAZID) – fuel cell system
- Hazard and Operability Analysis (HAZOP) – fuel cell system

4.2 SUBSYSTEM LEVEL ANALYSIS – FUEL CELL UNIT

As would be expected, Wartsila's development programme for the WFC20 Fuel Cell Unit includes a rigorous programme of safety management activities, the ultimate aim of which is to eliminate hazards or, where not possible, reduce the residual risk to a level considered acceptable. The programme, known as the System Safety Programme within Wartsila, defines a standardised approach to the management of risk. For each of the various safety studies carried out within the System Safety Programme, a common system decomposition and a common summary report or Hazard Log would be used. The Hazard Log would summarise all hazards identified for the fuel cell unit, together with their probability frequency and consequences, and suggested countermeasures.

4.2.1 Preliminary Problems Analysis (PPA)

The Preliminary Problems Analysis (PPA) carried out late in 2007 was led by Wartsila with the support of an engineering consultancy specialising in reliability, safety and quality, and took place in Espoo, Finland. The primary purpose of the study was to identify hazards and significant risks in the various intended operational and maintenance scenarios for the fuel cell unit early in the design phase.

Table 5. Number of identified potential risks by subsystems

No.	Subsystem	No of potential risks (includes total number with added reference to other subsystems)
1	Fuel Feed	9 (14)
2	Air Feed	3 (11)
3	Water Feed	2 (9)
4	Anode Circulation	1 (5)
5	Exhaust Gas System	6 (11)
6	Fuel Cell	9 (15)
7	Control of the Electric Current	9 (11)
8	Automation and logics	17 (20)
9	Inert Gas and Draining Systems	5 (7)
10	Others, area, container, laboratory	19 (41)
	SUMMARY	80 (144)

Figure 16: Preliminary Problems Analysis (PPA) list. Image courtesy of Wartsila.

The PPA was considered appropriate since it is a technique commonly used for preliminary safety studies and is generally followed up with more detailed risk analysis methods, such as HAZOP and/or FMECA, as the design matures. The study team comprised five technical experts from Wartsila with expertise in fuel cell technology and two from the safety and reliability consultancy with expertise in safety and reliability engineering. Using a brainstorming technique, potential problems and safety hazards were suggested and recorded. Following further discussion insignificant problems were disregarded. Hazards, their corresponding risks and measures to mitigate the risk were proposed. The fuel cell unit was functionally decomposed into 10 sub-systems for which a total of 80 potential risks were identified leading to 41 suggested actions. The individual subsystem with the greatest number of identified risks was the 'automation and logics' subsystem.

4.2.2 Preliminary Hazard List (PHL)

The Preliminary Hazard List (PHL) was compiled by Wartsila early in 2008 using a checklist based on the list of potential hazards included in Annex A of the European Standard EN1050, Safety of machinery – Principles for Risk Assessment. Applied early in design, the PHL produces a list of potential risk sources rather than specific hazards which is used to inform further hazard identification studies as design progresses. The study was carried out using the Front End Engineering Design (FEED) piping and instrumentation diagram (P&ID) for the fuel cell unit. A total of 12 hazards were entered in the hazard log.

Possible Risk Sources (EN1050)	*Relevant*
Mechanical hazards due to the machine parts and/or energy	• High pressure fluid injection/ejection
Electrical hazards	• Electrical contact direct and indirect • Electrostatic phenomena
Thermal hazards	• Burns and scalds due to physical contact
Hazards due to noise	• Hearing losses or other physiological disorders
Hazardous substances/materials	• Hazards resulting from contact with, or inhalation of harmful fluids, gases, mists, fumes and dusts • Fire or explosion hazards
Miscellaneous hazards	• Failure of the power supply • Failure of the control circuit • Break-up during operation
Mechanical lifting-related hazards and hazardous events	• From insufficient mechanical strength of parts

Figure 17: Preliminary Hazard Lost (PHL). Image courtesy of Wartsila.

4.2.3 Hazard and Operability (HAZOP) study

The Hazard and Operability study for the fuel cell unit took place between August and November 2007. The aim of the study was to examine the fuel cell unit in normal operation and, sub-system by sub-system, analyse the consequences of each component operating outside its normal operating

range. The study team comprised 17 experts from Wartsila including specialists in research, design and testing of the fuel cell unit and safety engineering. The full HAZOP study involved 11 separate team meetings over a period of several months.

The HAZOP was carried out using the FEED P&ID for the fuel cell unit and available functional information about the process. Sensor data including their preliminary upper and lower trip limits (for shutdown) were also available. The study used a similar decomposition to that used in the PPA study. For each component within a sub-system, the parameters associated with its operation were first established, e.g. pressure, flow rate and electrical power. The study then considered each parameter in turn and used the guide words 'more, less, no, reverse, other than, as well as, before after' to list possible abnormal behaviour. The effects of such behaviour were then analysed and recorded. During the study, design changes were discussed with the designers and the P&ID was updated accordingly. A total of 64 hazards were entered in the hazard log.

4.2.4 Failure Mode, Effects and Criticality Analysis (FMECA)

The Failure Mode, Effects and Criticality Analysis (FMECA) took place between September 2007 and February 2008 in Espoo, Finland. The aim of the FMECA was to analyse the effects of component failure during the most critical fuel cell unit operating modes, i.e. start-up and shut-down. A Functional or Sequence FMECA was considered most appropriate for analysing the start-up and shut-down sequences step by step. The FMECA team was led by Wartsila, supported by two consultants from a safety and reliability consultancy, and involved a total of six experts from Wartsila, each invited according to their own particular area of expertise. Eleven meetings were necessary to analyse a six-step start-up sequence and an eight-step shut-down sequence.

The FMECA was carried out using the FEED P&ID for the fuel cell unit and functional information about the process. The meetings involved the safety engineer working closely with the designer(s) responsible for each of the fuel cell unit components. Both the effects of failure and the probability of failure were determined and corresponding countermeasures were proposed. Following the completion of the FMECA, risk priorities were calculated based on the probabilities and consequences of the failures. A total of 23 hazards were entered in the hazard log.

4.3 SYSTEM LEVEL ANALYSIS

Recognising that the identification of hazards related to the fuel cell unit had already been the subject of extensive separate studies (as described), for the purposes of the system level studies the fuel cell unit was treated as a 'block box', as is common practice. For the purposes of the system level studies, in accordance with the system block diagram, the following primary components were examined:

- Bunkering system.
- Supply and return lines.
- Methanol tank.
- Fuel cell room.
- Fuel cell unit.

4.3.1 Hazard Identification (HAZID) study

The first full system Hazard Identification (HAZID) study was led by Lloyd's Register and took place over two days in London, England in January 2008. In the absence of technical standards for the use of methanol as a ship fuel, the aim of the HAZID study was to identify the potential hazards and risks associated with its carriage and use on board a seagoing vessel, and to establish requirements necessary to ensure a level of safety equivalent to that associated with conventional fuels. The HAZID study team comprised four technical experts from Wartsila, six from Lloyd's Register and one from Wallenius with expertise in fuel cell technology and marine engineering systems. The system and its primary components were analysed at an early stage in the system design by following the methanol flow from the bunkering station up to the feed to the fuel cell unit. Using early layout drawings, the study used a Structured 'What if' Technique (SWIFT) to analyse each part of the system and identify deviations from established best practice and recognised industry standards. The following guide words were used to identify the hazards:

- Failure/malfunction.
- Operator error.
- External effects.
- Integrity failure.
- Material defects.
- Emergency operation.
- Survey/maintenance.

The following standards were used as the primary reference during the study:

- Lloyd's Register's Rules and Regulations for the Classification of Ships.
- IMO International Maritime Dangerous Goods (IMDG) Code.
- IMO International Code for the Construction and Equipment of Ships Carrying Dangerous Chemicals in Bulk (IBC Code).
- IEC 60079-10:1996 Electrical apparatus for explosive gas atmospheres – Part 10: Classification of hazardous areas.

A total of 20 recommendations were made in the HAZID report.

4.3.2 Hazard and Operability (HAZOP) study

The second full system hazard identification and hazard analysis was also led by Lloyd's Register and took place over two days in September 2008 at the office of Wallenius in Stockholm, Sweden. The HAZOP study technique, widely used in the petrochemical and offshore industries, was considered appropriate for the METHAPU fuel cell system. The objectives of the HAZOP study were to:

- undertake a detailed examination of the methanol-based auxiliary power system and its utility systems on a line by line basis, in compliance with formal HAZOP procedures.
- assess the consequences of upset conditions, including flow, temperature and pressure, and identify potential hazards associated with all aspects of bunkering, fuel storage and fuel feed operation.
- assess the adequacy of the existing isolation, control and instrumentation to prevent or control the hazards, and establish additional measures to enable safe operations at all times.
- finalise the system P&ID for detailed design.

The study team comprised 23 representatives from six organisations, with expertise ranging from system design to operation and maintenance on board. The following stakeholders attended:

- Wallenius (6)
- Wartsila (6)
- Fennecon (1)
- STA (3)
- Lloyd's Register (6)
- DNV (1).

Parameters	Deviations
Flow	No More of Less of Reverse
Pressure	High Low
Temperature	High Low
Level	High Low
Composition	Change in
Operation	Connection Start-up Bunkering Shut-down Disconnection
Other Than	(Lay-out and HSE issues)

Figure 18: HAZOP parameters and guidewords.

The HAZOP was carried out using the FEED P&ID for the whole system. Each line of the system P&ID was reviewed in turn by the HAZOP team, applying the parameters/deviations and guidewords and considering potential scenarios to identify potential hazards. Causes of the potential hazards and resulting consequences were identified, together with any additional isolation, control and instrumentation measures considered necessary. The following system lines (nodes) were examined:

- Node 1: Bunkering line from road tanker to tank.
- Node 2: Methanol storage tank to pump unit.
- Node 3: Fuel cell room.

Where necessary, recommendations were made with respect to changes in the design and/or implementation of procedures to reduce risk. The team discussions were recorded on the HAZOP work sheets which were reported in terms of deviations, causes, consequences, safeguards and recommendations.

In line with the requirements of a formal safety assessment, a Safety Action Register (SAR) was developed. The SAR serves a number of purposes, including providing project partners with formal requests for actions related to the HAZOP study findings, assisting in understanding and facilitating the agreement among parties on the scope of actions required, and enabling the reporting of these actions and tracking of each action from initiation to confirmation of close-out. A total of 41 recommendations were entered in the SAR.

5. DETAILED DESIGN

All recommendations/actions from the various safety studies were carried over to the design phase of the development lifecycle as additional requirements (additional to the requirements derived directly from stakeholder requirements) for the initial design of the system. The translation of the recommendations/actions into design requirements was informed by the risk management hierarchy in accordance with best practice. However, recognising the short term nature of the METHAPU project (several months only) a number of hazards considered to be of lower risk were controlled through the use of operational instructions (administrative controls) and personal protective equipment (PPE). These included several risks related to the bunkering of methanol, an event which would only be likely to be carried out a few times during the system's lifetime.

Perhaps unsurprisingly, the focus of greatest attention during the safety studies and the ensuing design discussions was the uncontrolled release of methanol.

In prevention, detection and control of any such release, the design would draw heavily on the high level principles of the international standard IEC60079 – Electrical Apparatus for Explosive Gas Atmospheres, Part 10 Classification of Hazardous Areas, supported by the detailed requirements of the International Code for the Construction and Equipment of Ships Carrying Liquefied Gases in Bulk (IGC Code) and the International Code for the Construction and Equipment of Ships Carrying Chemical Cargoes in Bulk (IBC Code).

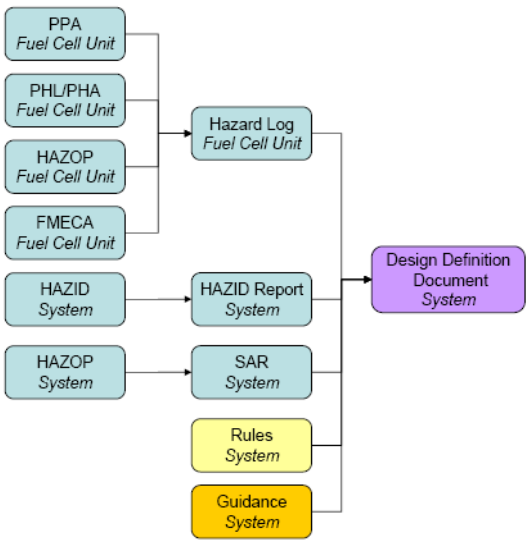

Figure 19: Development of risk-based requirements.

The WFC20 unit itself would represent a significant risk in this respect. Within the METHAPU project, the WFC20 unit would be located within a dedicated compartment on board *Undine*. However, as part of Wartsila's commercial marine power generation product range, the WFC20 unit would ultimately need to be suitable for location within a conventional machinery space. As a consequence, Wartsila worked closely with Lloyd's Register to develop a compartmentalised design in which all risks are managed within the enclosure of the fuel cell unit itself.

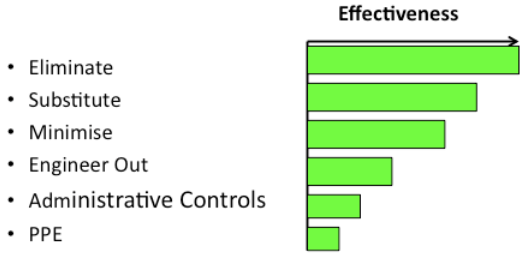

Figure 20: Risk control hierarchy.

Figure 21: WFC20 located in the fuel cell room. Image courtesy of Wartsila.

Such an arrangement was achieved by separating the unit into hazardous and non-hazardous compartments or zones through the application of a range of risk control measures. These included the removal of electrical equipment and ignition sources from the hazardous zones, the elimination of joints and couplings from fuel lines and components wherever possible through the use of welded connections (full penetration welds supported by rigorous pressure testing, leak testing and NDE), and forced ventilation with gas detection and process monitoring.

Controlling the risks within the WFC20 unit enclosure itself would mean that the space in which the WFC20 was located would not need to

be considered a hazardous zone and therefore it could be a machinery space. Although not a hazardous zone, certain additional safeguards within the machinery space would be necessary as a result of connections running through the machinery space to and from the fuel cell unit. Such additional safeguards were implemented within the fuel cell room on board *Undine*.

Figure 22: Lifting of fuel cell room into position in Bremerhaven. Image courtesy of Wallenius.

The fuel cell room was equipped with an independent ventilation system suitable for continued operation in the event of a flammable or toxic release and capable of preventing the concentration of methanol vapour within the room reaching the lower explosive limit (LEL) of 6% by volume in a worst case leakage scenario. Due to the density of methanol vapour being similar to that of air over the range of temperatures anticipated within the fuel cell room, gas detectors were located both on the ceiling and at floor level.

Figure 23: Fuel cell room, purge gas container and CO_2 flooding cabinet (red). Image courtesy of Wallenius.

The fuel cell room ventilation system and gas detectors were independent of the fuel cell unit and part of a dedicated, hardwired alarm and safety system. Also connected to the alarm and safety system were the gas detectors monitoring the ventilated bunkering and supply and return pipelines, a gas detector monitoring the save-all below the outlet valves from the methanol tank, and differential pressure switches monitoring the ventilation of the bunkering pipeline, the supply and return pipeline, the fuel cell unit and the fuel cell room.

In the event of a low level gas alarm or ventilation failure, the alarm and safety system would activate alarms both locally and in *Undine's* engine control room, via a group alarm signal to *Undine's* machinery alarm system (MAS), and signal the fuel cell unit in order that the unit could execute a partial shutdown. In the event of a high level gas alarm an emergency shutdown of the fuel cell unit would be triggered and the supply of methanol isolated at the methanol tank, and all electrical equipment within the fuel cell room disconnected with the exception of the fuel cell room ventilation and gas detection.

Alarms related to the fuel cell unit itself would be brought to the attention of the crew via the alarm and safety system group alarm to *Undine's* MAS.

Figure 24: Manual shut-off of methanol supply and fire dampers. Image courtesy of Wallenius.

Fire detectors within the fuel cell room were integrated directly with *Undine's* existing fire detection system. In the event of a fire within the fuel cell room, all power within the room could be disconnected, the methanol supply isolated at the methanol tank and all fire dampers on all ventilation inlets and outlets closed automatically

by activation of one of the emergency stop buttons located in the vicinity of the fuel cell room and the methanol tank.

As is normal practice, the CO_2 flooding fire fighting system would be activated manually by operating a valve inside a dedicated control cabinet. Closure of all fire dampers and shutoff of the methanol supply could also be done manually at appropriate locations.

Ventilation and exhaust outlet ducting from the fuel cell unit and the fuel cell room itself discharged from outlets on the roof of the room. Due to the potential for flammable and/or toxic releases, the areas around the outlets were designated hazardous zones in accordance with classification requirements.

Figure 25: Methanol tank showing valve enclosure and save-all and hazardous zone marked. Image courtesy of Wallenius.

Also in accordance with classification requirements, hazardous zones were established around the outlets from the ventilated ducts surrounding the bunking and supply and return lines, and around the methanol tank fittings.

6. EARLY IN-SERVICE FEEDBACK

At the time of writing, less than two weeks following decommissioning, Wartsila is analysing the performance data for the WFC20 SOFC unit during its period of operation on board *Undine*. Before installation on board, the WFC20 unit had operated under load for approximately 150 hours during testing and commissioning at Wartsila in Espoo, Finland. Between May 2010, when the fuel cell unit was installed on board in Bremerhaven, and November 2010, when it was decommissioned (also in Bremerhaven) the fuel cell unit accumulated a total of 1,250 operating hours under load. During this period, *Undine* was in continuous operation on a typical trading pattern taking in Europe, North America, Central America and Asia.

The electrical performance of the WFC20 unit appeared to be completely satisfactory. The total harmonic distortion (THD) of the electrical output was recorded at 3.2% of the fundamental and was within classification requirements. Although the electrical output from the WFC20 unit to *Undine's* electrical distribution network was interrupted on several occasions, primarily due to partial shutdown of the fuel cell unit triggered by false alarms from the gas detection system, full shutdown of the fuel cell unit was triggered by the WFC20 units own control system on only four occasions during the whole period of operation on board.

Following bunkering in Bremerhaven, *Undine* sailed to Zeebrugge in Belgium, from there to Southampton in England, and then set sail for Halifax in Canada. The fuel cell unit operated correctly for the duration of the transatlantic crossing until approaching the US East Coast when a low methanol supply pressure triggered an automatic shutdown. The immediate cause was found to be clogging of the methanol fuel filter. Subsequent analysis ashore revealed contamination which could not be readily associated with degradation of any of the system components. It was concluded that the contamination was present in the methanol when bunkered. Minor modifications to the bunkering arrangements were implemented including the introduction of an additional filter to allow circulation of the methanol fuel through the filters before start-up of the fuel cell unit.

The fuel cell unit was restarted following departure from Halifax and continued to operate normally until approaching the Panama Canal when the high ambient temperature revealed the fuel cell room ventilation arrangements to be inadequate, resulting in an overheating of the fuel cell unit and a second automatic shutdown triggered by high internal temperatures within the fuel cell unit. As a temporary measure access doors to the fuel cell room were opened allowing the fuel cell unit to be eventually restarted. The fuel cell unit shut down a further two times, in the vicinity of Japan, due to component failures.

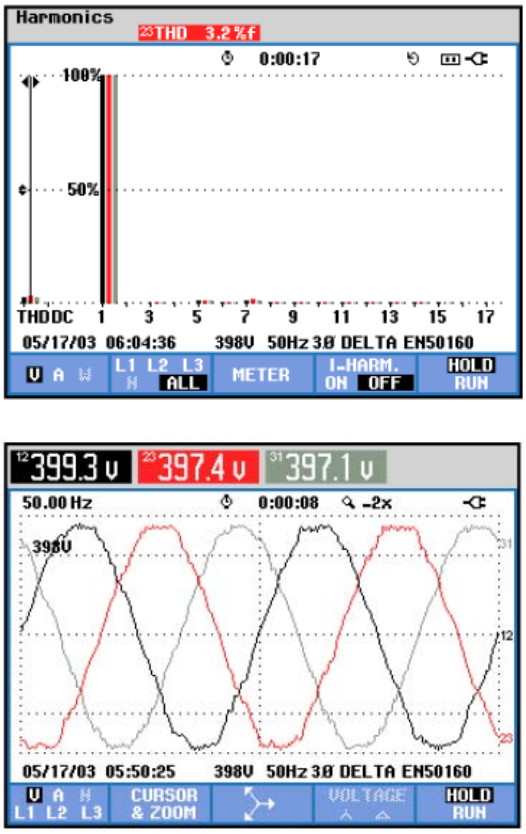

Figure 26: Fuel cell unit power quality measurement. Image courtesy of Wartsila.

7. CONCLUSIONS

The project partners were successful in installing and operating the world's first SOFC electrical generator running on methanol fuel on board an internationally trading merchant ship. Although the detailed analysis of the performance data is ongoing, the following conclusions can already be made with regard to the specific aims of the project.

The project was successful in demonstrating the ability of SOFC technology to withstand the particular demands of the marine environment, albeit during summer rather than winter conditions. In doing so, the project provided valuable performance data in respect of both the SOFC technology itself and the many unique components and fittings necessary to support the technology, particularly the methanol fuel reformer.

While the use of methanol as a marine fuel necessitated many additional precautions, the project successfully demonstrated that such a fuel could be utilised safely without major deviations from standard operating procedures or standard ship construction techniques.

Despite the introduction of several new hazards associated with fuel cell technology and methanol fuel, the project was successful in demonstrating that the fuel cell system installed on board *Undine* would present no greater risk to the ship, its occupants or the environment than that associated with conventional marine machinery and marine fuels. In doing so, it created a precedent for the wider use of alternative and potentially sustainable fuels on board ships.

In addition to the excellent co-operation between the project partners, the author wishes to acknowledge the contribution of his Lloyd's Register colleagues in the UK, Finland, Sweden, Norway, Germany and Ireland to the project's success.

---

[1] New European Driving Cycle (NEDC)
[2] Validation of Renewable Methanol Based Auxiliary Power System for Commercial Vessels, Annex I – Description of Work, 20.03.2009
[3] Future Fuels for Shipping, Fontell, 30 November 2010
[4] Fuel Cell Systems Explained, 2nd edition, Larminie and Dicks
[5] Fuel cell technology in inland navigation (CREATING), EC 6th Framework (FP6), Technical report, Jan 2006
[6] www.vikinglady.no
[7] Fuel cell testing and standardisation thematic network (FCTESTNET), EC 5th Framework (FP5)
[8] Fuel cell technology for ships, EC 5th Framework (FP5)
[9] www.wartsila.com
[10] IEC60721-3-6 Classification of environmental conditions. Part 3: Classification of groups of environmental parameters and their severities. Ship environment.
[11] SOLAS II-2, Part A Reg 3 Definitions
[12] Rules and Regulations for the Classification of Ships, Part 6 Chapter 2, Lloyd's Register 2010
[13] D3.3 Assessment process definition, METHAPU project, 11.06.08
[14] ISO/IEC 15288 Systems and software engineering – System lifecycle processes